MIXPRO 60 PREMIUM continuous mixer - Mixing group

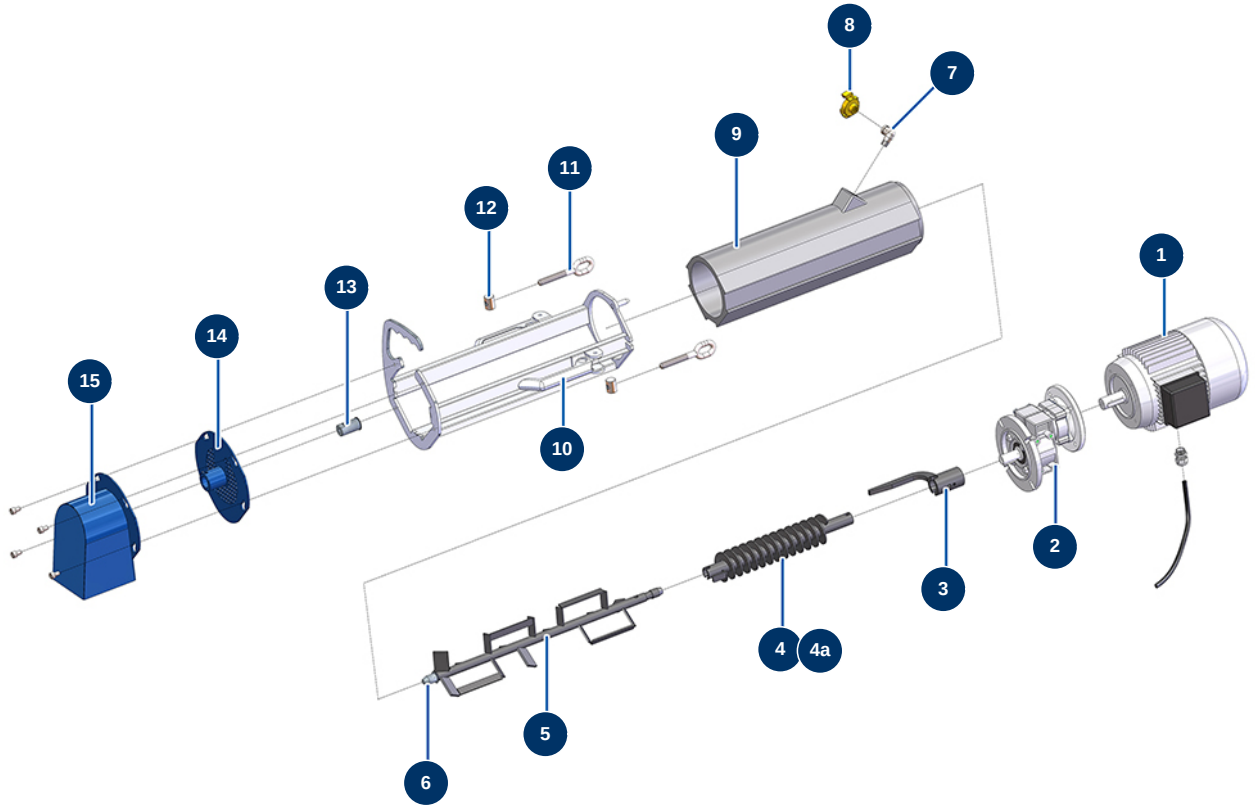

Détails des pièces

Pos.	Référence	Désignation
1	MI3D00201000	Electric motor 1,1 kW - T90 - B14 - 1400 rpm - 230V
2	MI3D00310400	Coaxial speed reducer - T411A - R4,62 - B14/T90
3	C22645	
4	C22639	MIXPRO 60 & MIXER 35 6L primary shaft
4a	C22743	
5	MI7005001000	MIXER 35 mixing shaft
6	MI4001006100	
7	MI3G00509202	90° galvanised elbow 1/2" MaleC x 1/2" FemaleC
8	13572	1/2" outer threaded Geka coupling"
9	MI4001008002	Polyurethane mixing chamber for MIXER 35
10	C22634	
11	MI3T01000400	Motor Closing Ring
12	MI3T01000500	Engine support closing ring nut

Pos.	Référence	Désignation
13	MI4905002100	
14	C22705	
15	C22643	